Instruction Manual

PROFESSIONAL SHOW LIGHT

Beam 360

---------- **2021** Ver1.20210705 ----------

Unpacking: Thank you for purchasing Beam360. Every unit has been thoroughly tested and has been shipped in perfect operating condition. Carefully check the shipping carton for damage that may have occurred during shipping. If the carton appears to be damaged, carefully inspect your fixture for any damage and be sure all accessories necessary to operate the unit has arrived intact. In the case damage has been found or parts are missing, please contact the manufacturer or your dealer for further instructions. Do not return this unit to your dealer without first contacting.

FOR YOUR OWN SAFETY, PLEASE READ THIS USER MANUAL CAREFULLY BEFORE POWERING OR INSTALLING beam360. SAVE IT FOR FUTURE REFERENCE.

Warning! To prevent or reduce the risk of electrical shock or fire, do not expose this unit to rain or moisture.

PLEASE consider that damages caused by manual modifications to the device are not subject to warranty.

Caution! There are no user serviceable parts inside this unit. Do not attempt any repairs yourself; doing so will void your manufactures warranty. In the unlikely event your unit may require service please contact the manufacturer or your dealer.

PLEASE recycle the shipping carton when ever possible.

General Instructions: To optimize the performance of this product, please read these operating instructions carefully to familiarize you with the basic operations of this unit. These instructions contain important safety information regarding the use and maintenance of this unit.

Features

- Multi-Colors+goboes
- Color strobe
- Electronic Dimming 0-100%
- DMX-512 protocol
- Master/Slave synchronization
- LCD operation menu with function buttons
- Daisy Chain Units Together in DMX Mode

Safety Precautions

- To reduce the risk of electrical shock or fire, do not expose this unit to rain or moisture.
- Do not spill water or other liquids into or on to your unit.
- Be sure that the local power outlet matches that of the required voltage for your unit.
- Do not attempt to operate this unit if the power cord has been frayed or broken. Do not attempt to remove or break off the ground prong from the electrical cord. This prong is used to reduce the risk of electrical shock and fire in case of an internal short.
- Disconnect from main power before making any type of connection.
- Do not remove the cover under any conditions. There are no user serviceable parts inside.
- Never operate this unit when it’s cover is removed.
- Never plug this unit in to a dimmer pack.
- Always be sure to mount this unit in an area that will allow proper ventilation. Allow about 6” (15cm) between this device and a wall.
- Do not attempt to operate this unit, if it becomes damaged.
- This unit is intended for indoor use only; use of this product outdoors voids all warranties.
- During long periods of non-use, disconnect the unit’s main power.

- Always mount this unit in safe and stable matter.
- Power-supply cords should be routed so that they are not likely to be walked on or pinched by items placed upon or against them, paying particular attention to the point they exit from the unit.
- Cleaning -The fixture should be cleaned only as recommended by the manufacturer. See “Cleaning” for details.
- Heat -The appliance should be situated away from heat sources such as radiators, heat registers, stoves, or other appliances (including amplifiers) that produce heat.
- The fixture should be serviced by qualified service personnel when:
  A. The power-supply cord or the plug has been damaged.
  B. Objects have fallen, or liquid has been spilled into the appliance.
  C. The appliance has been exposed to rain or water.
  D. The appliance does not appear to operate normally or exhibits a marked change in performance.

Set Up:

Power Supply: Before plugging your unit in, be sure the source voltage in your area matches the required voltage for your beam360, The model is Auto power supply, It is workable in 90-250V/50~60Hz. Please make sure your unit voltage matches the wall outlet voltage before attempting to operate you fixture.

Connection to the mains

For protection from electric shock, the fixture must be earthed!

Install a suitable plug on the power cord, note that the cores in the power cord are colored according to the following table. The earth has to be connected!

If you have any doubts about proper installation, consult a qualified electrician.

Core **(EU)**	Core (US)	Connection	Plug Terminal Marking
Brown	Black	Live	L
Light blue	White	Neutral	N
Yellow/Green	Green	Earth	⏚

DMX512 connection

The fixture is equipped with 3pin and 5pin XLR sockets for DMX input and output. The sockets are wired in parallel.

Only use a shielded twisted-pair cable designed for RS-485 and 3-pin or 5-pin XLR-plugs and connectors in order to connect the controller with the fixture or one fixture with another.

DMX-output

XLR mounting-sockets (rear view):

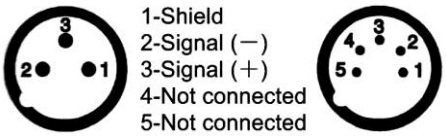

DMX-input

XLR mounting-plugs (rear view):

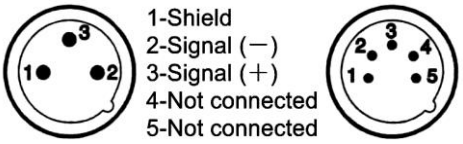

DMX Linking: To ensure proper DMX data transmission, when using several DMX fixtures try to use the shortest cable path possible. The order in which fixtures are connected in a DMX line does not influence the

DMX addressing. For example; a fixture assigned a DMX address of 1 may be placed anywhere in a DMX line, at the beginning, at the end, or anywhere in the middle. When a fixture is assigned a DMX address of 1, the DMX controller knows to send DATA assigned to address 1 to that unit, no matter where it is located in the DMX chain.

Operating Modes: You can use the beam360 in 3 ways:

- Auto Mode - The unit will automatically chase through the different colors and built-in programs.
- Slave Mode – The unit will run under slave mode.
- DMX control mode - This function will allow you to control each individual fixtures traits with a standard DMX 512 controller.

DMX Mode: Operating through a DMX controller give the user the freedom to create their own programs tailored to their own individual needs. This function also allows you to use your fixtures as spot lights.

1. This function will allow you to control each individual fixture's traits with a standard DMX 512 controller.
2. Beam360 uses 16/20 two DMX channels modes to operate. Please see "DMX Values and Functions" for the DMX traits.
3. To run your fixture in DMX mode, plug in the fixture via the XLR connections to any standard DMX controller. Set your desired DMX address following the setup specifications that come with your DMX controller.

Touch Buttons: There are four buttons under the LCD display below:
There are four touch buttons under the LED display: Menu, Up, Down, Enter. Normally, the LED will display the current DMX address code of the fixture. At this time, presses up and down to choose the functions you want.

LCD display home page Introductions

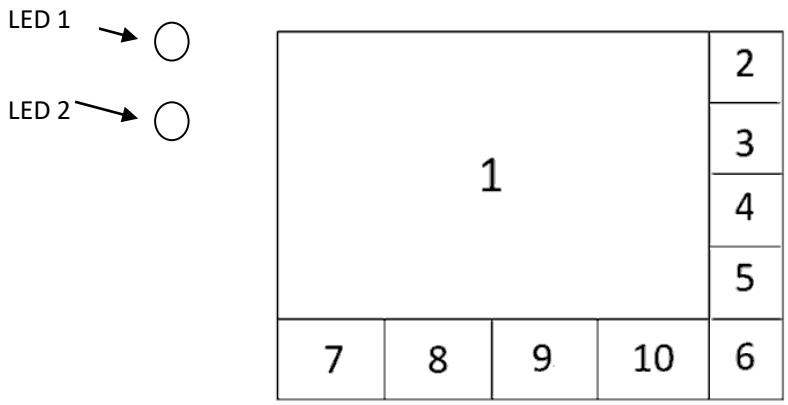

1 — Shows current DMX address in big font size.
2 — click to open main menu.
3 — click to set the language.
4 — click to choose the dimmer Curve.
5 — click to set the channels mode, and the figures shows current channels number.
6 — click to reverse the display.
7 — Show the DMX signal state. Click to toggle Master/Slave mode, and the figure's meaning is as follows:

Green down arrow: The device is receiving DMX signal from console.
Yellow “X” ： The DMX signal is lost.
Blue up arrow: The device is working on master mode, and it is sending signal to outside now.

8 — click to set the running mode. If the figure is highlighted, that means the device is running in this mode as is shown.
9 — error information. It turns yellow if has some errors when self-test. Click to open the error information menu for more details.
10 — click to show the version of the firmware.

Technical Specifications

Electrical
Power supply:……..…electronic auto-ranging
Input voltage range:……supply 90-250V, 50/60Hz
Fuse:…… 5 A@220V
Power consumption:……450W

Optic
Lamp source: Osram311W
Beam angle: 1.8°
Lamp lifespan: 1000 hours
Dimmer: Smooth dimmer from 0-100%
Fixed gobo wheel: 12 gobos+Open
Color wheel: 14 colors+Open
8-facet prism and 8+16 face Prism
Focus+Frost

Motorized
Pan movement range: 540°
Tilt movement range: 270°
16 bit movement resolution
Automatic Pan/Tilt position correction

LCD operation
Built-in demo sequences
Silent fans cooling
Strong three-phase motors
Stand-alone operation
Net dimension: 380(L) x 247(W) x 565(H) mm
Weight (net): 16.5kg
Warranty: 1 Year ……

Main Menu

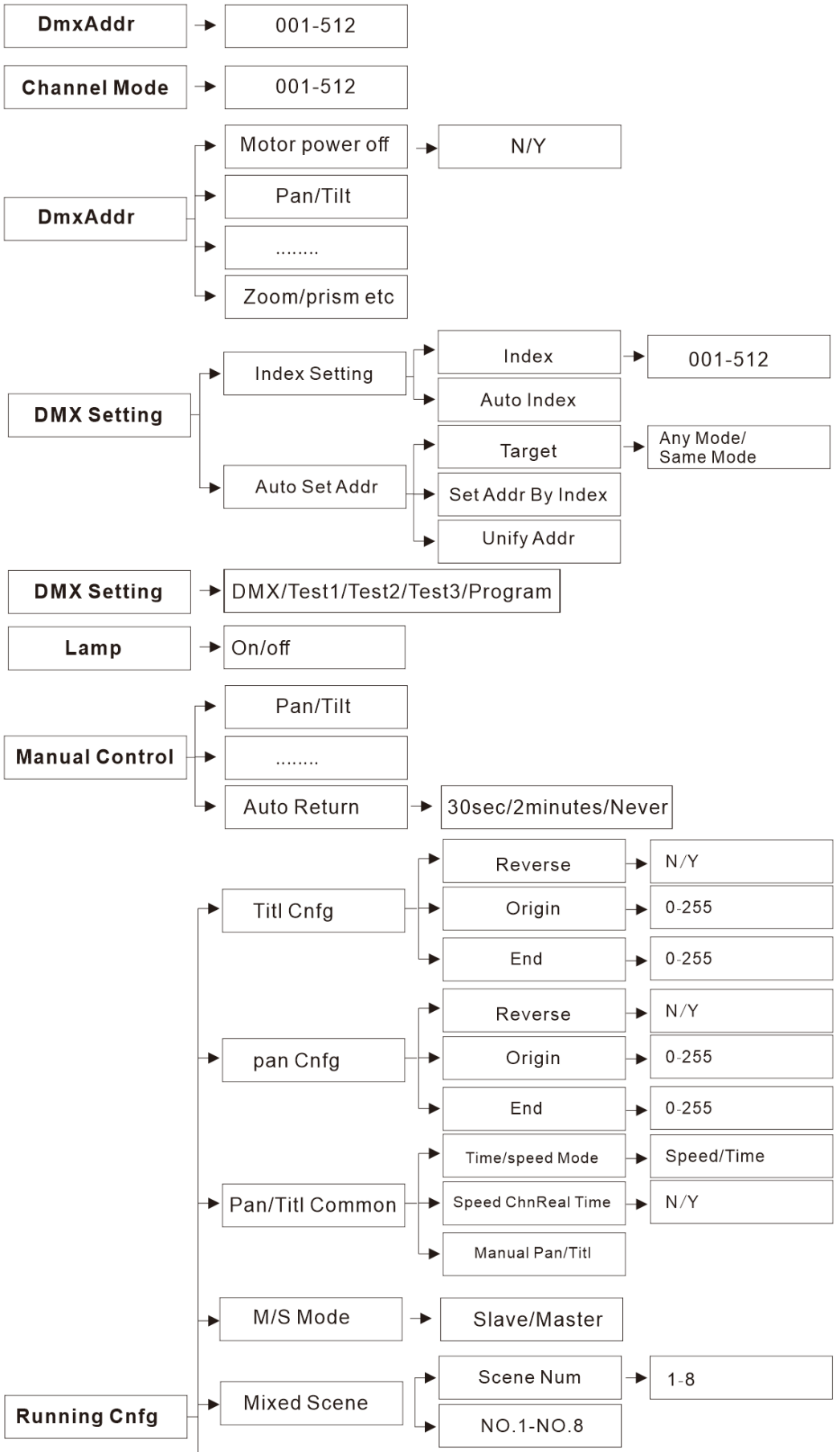
DmxAddr
001-512
Channel Mode
001-512
DmxAddr
Motor power off
N/Y
Pan/Tilt
.....
Zoom/prism etc
DMX Setting
Index Setting
Index
001-512
Auto Index
Auto Set Addr
Target
Any Mode/
Same Mode
Set Addr By Index
Unify Addr
DMX Setting
DMX/Test1/Test2/Test3/Program
Lamp
On/off
Manual Control
Pan/Tilt
.....
Auto Return
30sec/2minutes/Never
Running Cnfg
Titl Cnfg
Reverse
N/Y
Origin
0-255
End
0-255
pan Cnfg
Reverse
N/Y
Origin
0-255
End
0-255
Pan/Titl Common
Time/speed Mode
Speed/Time
Speed ChnReal Time
N/Y
Manual Pan/Titl
M/S Mode
Slave/Master
Mixed Scene
Scene Num
1-8
NO.1-NO.8

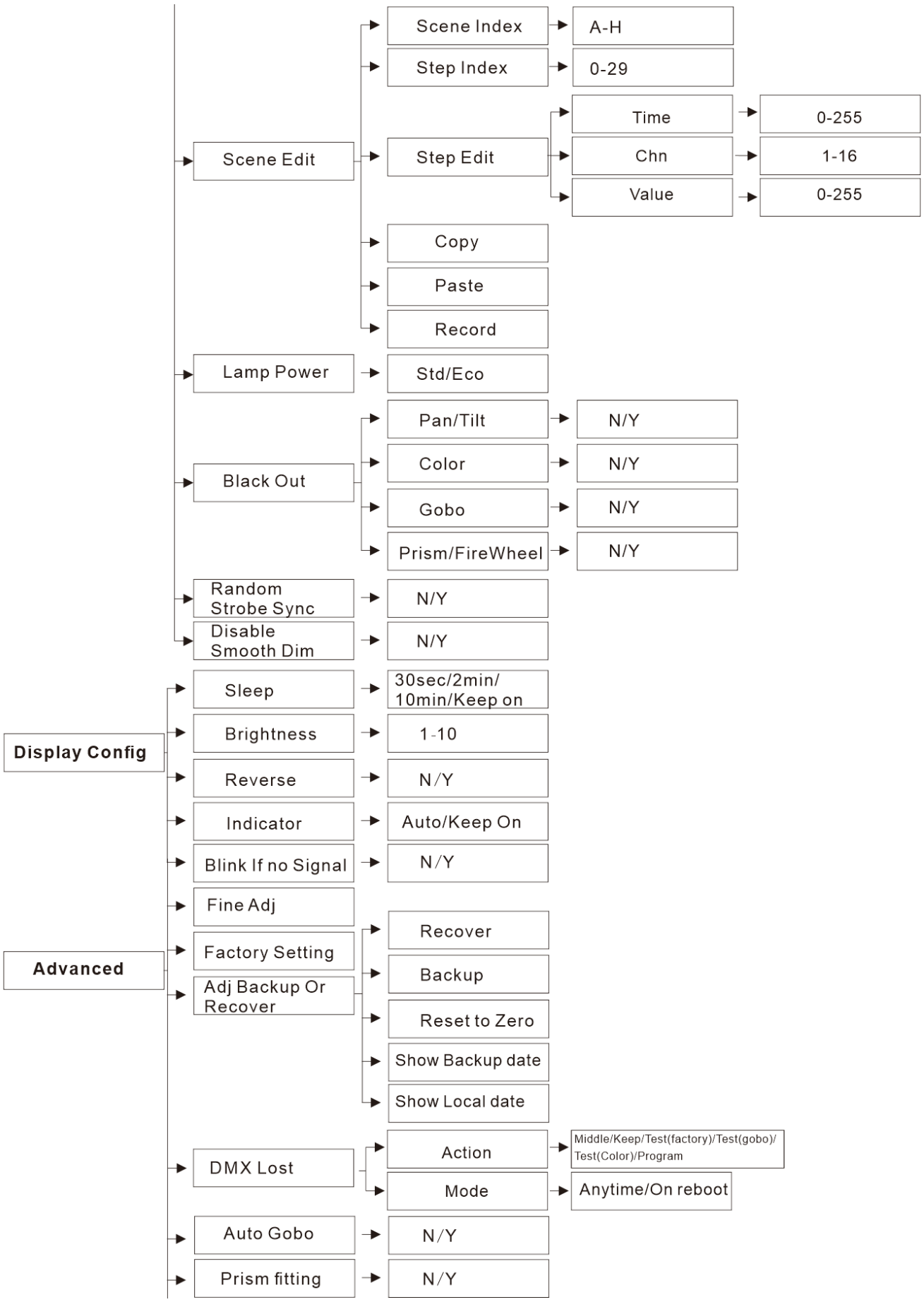
Scene Edit
Scene Index
A-H
Step Index
0-29
Step Edit
Time
0-255
Chn
1-16
Value
0-255
Copy
Paste
Record
Lamp Power
Std/Eco
Black Out
Pan/Tilt
N/Y
Color
N/Y
Gobo
N/Y
Prism/FireWheel
N/Y
Random Strobe Sync
N/Y
Disable Smooth Dim
N/Y
Display Config
Sleep
30sec/2min/ 10min/Keep on
Brightness
1-10
Reverse
N/Y
Indicator
Auto/Keep On
Blink If no Signal
N/Y
Advanced
Fine Adj
Factory Setting
Adj Backup Or Recover
Recover
Backup
Reset to Zero
Show Backup date
Show Local date
DMX Lost
Action
Middle/Keep/Test(factory)/Test(gobo)/ Test(Color)/Program
Mode
Anytime/On reboot
Auto Gobo
N/Y
Prism fitting
N/Y

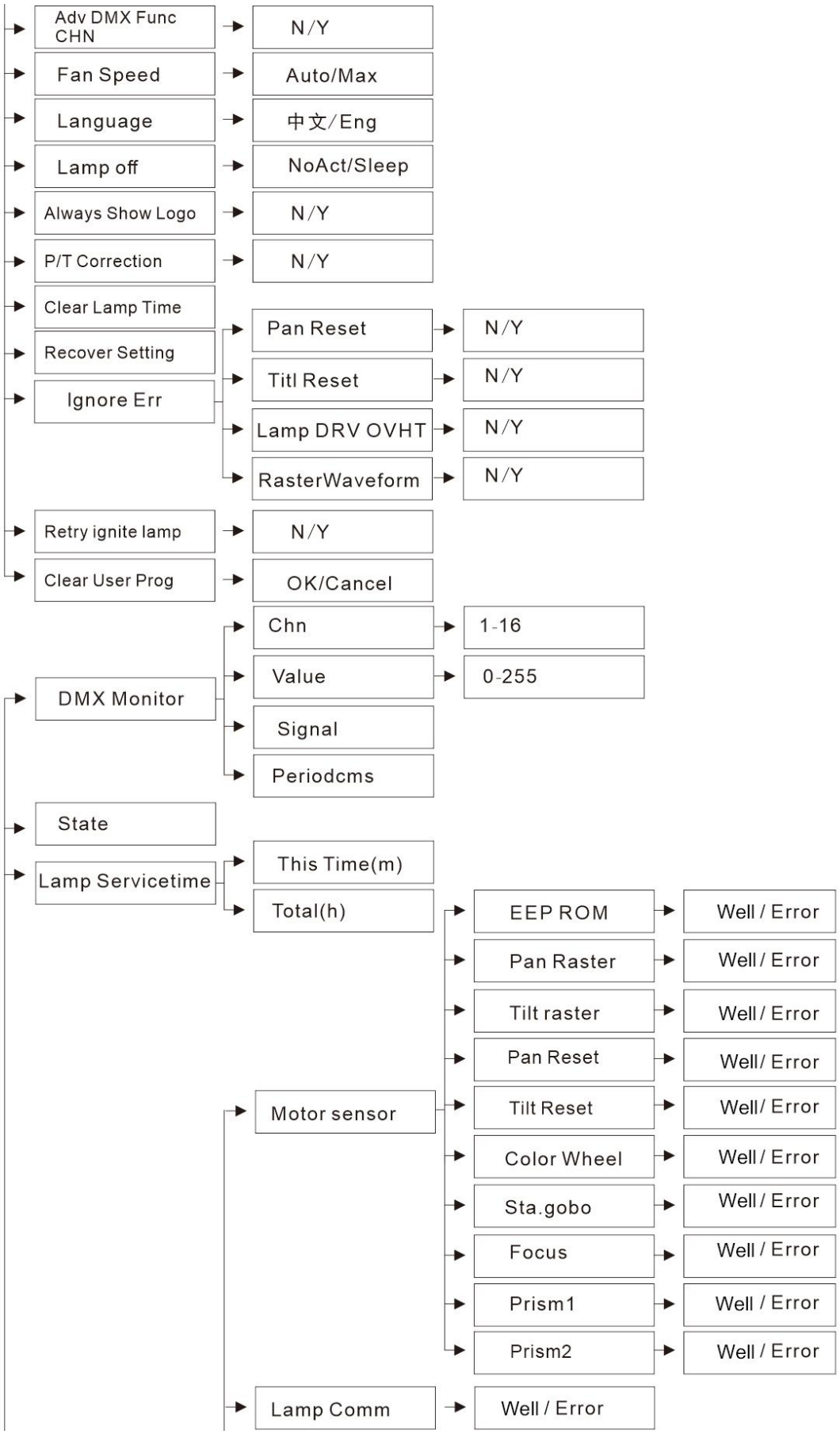
Adv DMX Func CHN
N/Y
Fan Speed
Auto/Max
Language
中文/Eng
Lamp off
NoAct/Sleep
Always Show Logo
N/Y
P/T Correction
N/Y
Clear Lamp Time
Recover Setting
Ignore Err
Pan Reset
N/Y
Titl Reset
N/Y
Lamp DRV OVHT
N/Y
RasterWaveform
N/Y
Retry ignite lamp
N/Y
Clear User Prog
OK/Cancel
DMX Monitor
Chn
1-16
Value
0-255
Signal
Periodcms
State
Lamp Servicetime
This Time(m)
Total(h)
Motor sensor
EEP ROM
Well / Error
Pan Raster
Well / Error
Tilt raster
Well / Error
Pan Reset
Well/ Error
Tilt Reset
Well/ Error
Color Wheel
Well / Error
Sta.gobo
Well / Error
Focus
Well / Error
Prism1
Well / Error
Prism2
Well / Error
Lamp Comm
Well / Error

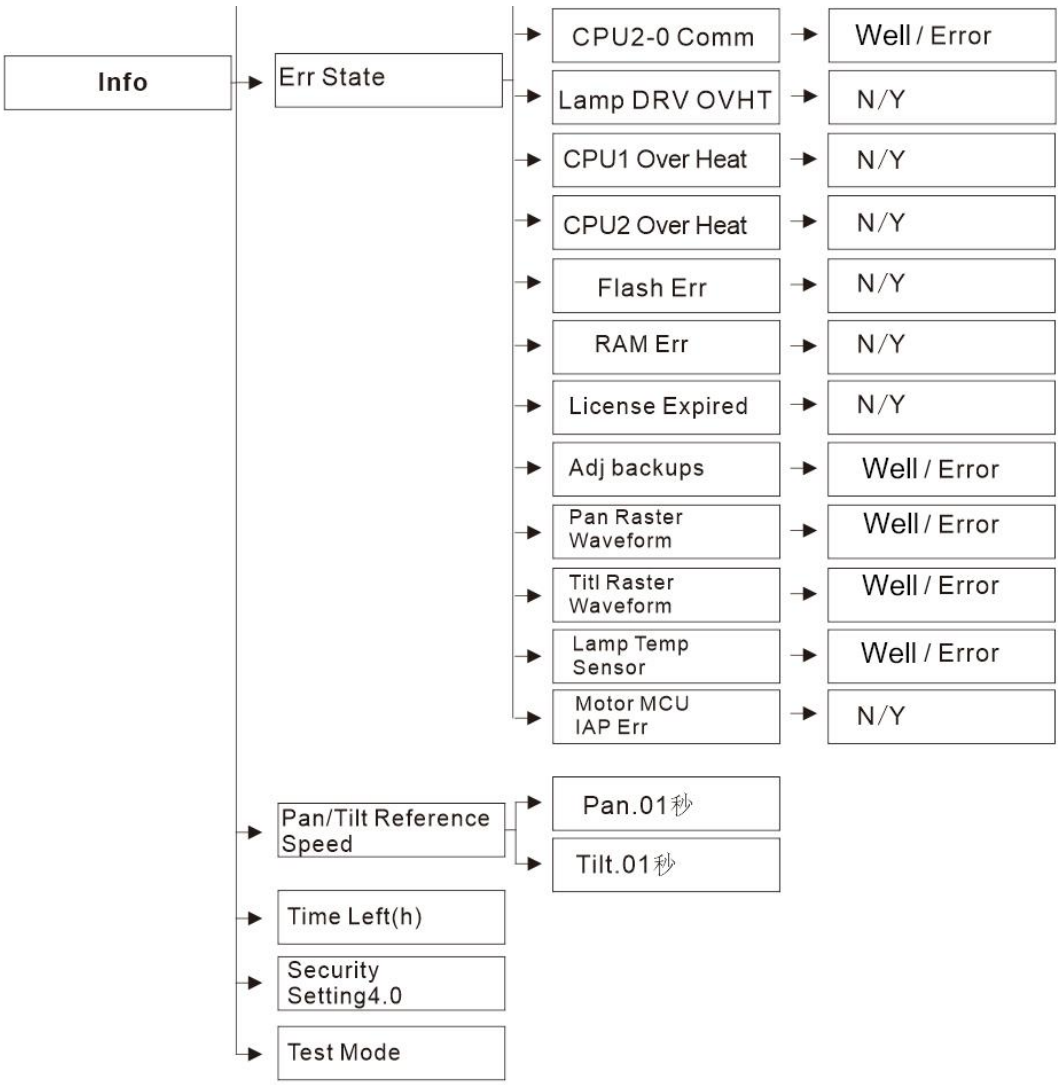

DMX Chart:

Standard Mode	Reduced Mode	DMX Value	Function
1	1	Color Wheel	
		0 - 4	White
		5 - 8	White+Color 1
		9 - 12	Color 1
		13 - 17	Color 1+Color 2
		18 - 21	Color 2
		22 - 25	Color 2+Color 3

		26 - 29	Color 3
		30 - 34	Color 3+Color 4
		35 -38	Color 4
		39 - 42	Color 4+Color 5
		43 - 46	Color 5
		47 - 51	Color 5+Color 6
		52 - 55	Color 6
		56 - 59	Color 6+Color 7
		60 - 63	Color 7
		64 - 68	Color 7+Color 8
		69 - 72	Color 8
		73 - 76	Color 8+Color 9
		77 - 81	Color 9
		82 - 85	Color 9+Color 10
		86 - 89	Color 10
		90 - 93	Color 10+Color 11
		94 - 98	Color 11
		99 - 102	Color 11+Color 12
		103 - 106	Color 12
		107 - 110	Color 12+Color 13
		111 - 115	Color 13
		116 - 119	Color 13+Color 14
		120 - 123	Color 14
		124 - 127	Color 14+White
		128 - 190	Forward Fast-Slow
		191 - 192	Stop
		193 - 255	Backward Slow-Fast
2	2	Strobe	
		0 - 3	Closed
		4 - 103	Strobe Slow-Fast
		104 - 107	Open
		108 - 155	Pulse Close Slow-Fast
		156 - 207	Pulse Open Fast-Slow
		208 - 212	Open
		213 - 251	Random Slow-Fast
		252 - 255	Open
3	3	0-255	Dimmer
4	4	Gobo	
		0 - 4	Open
		5 - 12	Gobo1
		13 - 20	Gobo2
		21 - 28	Gobo3
		29 - 36	Gobo4

		37 - 44	Gobo5
		45 - 52	Gobo6
		53 - 60	Gobo7
		61 - 68	Gobo8
		69 - 76	Gobo9
		77 - 84	Gobo10
		85 - 92	Gobo11
		93 - 102	Gobo12
		103 - 110	Gobo1 Shake
		111 - 118	Gobo2 Shake
		119 - 126	Gobo3 Shake
		127 - 134	Gobo4 Shake
		135 - 142	Gobo5 Shake
		143 - 150	Gobo6 Shake
		151 - 158	Gobo7 Shake
		159 - 166	Gobo8 Shake
		167 - 174	Gobo9 Shake
		175 - 182	Gobo10 Shake
		183 - 190	Gobo11 Shake
		191 - 199	Gobo12 Shake
		200 - 201	White
		202 - 227	Forward Fast-Slow
		228 - 229	Stop
		230 - 255	Backward Slow-Fast
5	5	Prism 1	
		0 - 19	Open
		20 - 75	Prism
		76 - 95	Open
		96 -127	Prism Effect Fast-Slow
		128 - 255	Prism
6	6	Prism 2	
		0 - 63	Open
		64 - 75	Prism Effect Fast-Slow
		76 - 255	Prism
7	7	Prism Rotation	
		0 - 127	Index
		128 - 190	Forward Fast-Slow
		191 - 192	Stop
		193 - 255	Backward Slow-Fast
8	8	Frost	
		0 - 19	Open
		20 - 137	Rainbow

		138 - 255	Frost
9	9	0 - 255	Focus
10	10	0 - 255	Pan
11	11	0 - 255	Pan Fine
12	12	0 - 255	Tilt
13	13	0 - 255	Tilt Fine
14	14	0 - 255	P/T Speed Fast-Slow
15	15	Reset	
		0 - 49	Unused
		50 - 100	Reset Pan/Tilt
		101 - 200	Reset Head
		201 - 255	All Reset
16	16	Lamp Control	
		0 - 25	Unused
		26 - 100	Lamp Off
		101 - 255	Lamp On
*	17	0 - 255	P/T Speed (Time Mode)
*	18	0 - 255	Color Speed
*	19	0 - 255	Intensity Speed
*	20	0 - 255	Gobo Speed

Fixture dimension 380x247x565(mm):

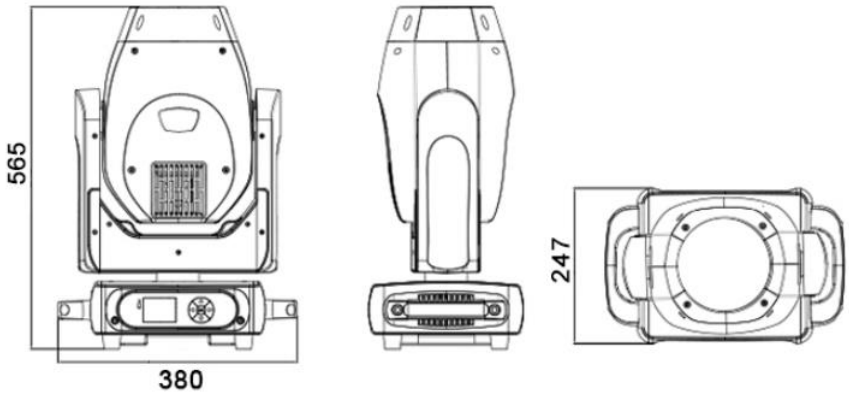

Rigging the fixture

Caution: Fixture may cause severe injuries when crashing down! If you have doubts concerning the safety of a possible installation, do not install the moving head!

Before rigging make sure that the installation area can hold a minimum point load of 10 times the fixture's weight.

When installing the device, make sure there is no highly inflammable material (decoration articles, etc.) in a distance of min. 1.0 m.

CAUTION!

Use an appropriate clamp to ring the fixture on the truss.
Follow the instructions mentioned at the bottom of the base.
Make sure that the device is fixed properly! Ensure that the structure (truss) to which you are attaching the fixtures is secure.

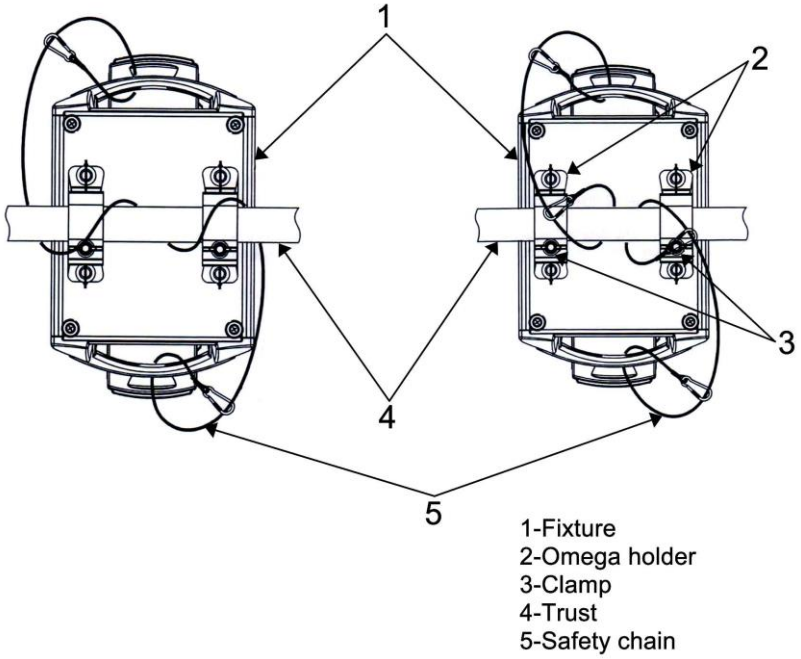

Securing the fixture via one safety wire Securing the fixture via two safety wires

Cleaning

Due to fog residue, smoke, and dust cleaning the internal and external optical lenses must be carried out periodically to optimize light output.

1. Use normal glass cleaner and a soft cloth to wipe down the outside casing.
2. Clean the external optics with glass cleaner and a soft cloth every 20 days.
3. Always be sure to dry all parts completely before plugging the unit back in.

Cleaning frequency depends on the environment in which the fixture operates (i.e. smoke, fog residue, dust, dew).

TROUBLE SHOOTING: *Listed below are a few common problems the user may encounter, with solutions.*

Note: All information is subject to change without prior notice.